ACRI304S
30” STAINLESS STEEL
INDUCTION RANGE

GENERAL CHARACTERISTICS

Worktop	4-Zone Induction Cooktop
Controls	SS Metal Knobs with LED Screen
Handle	Nova Trazo
Door	4-layer black glass
Hot surface indicator	Yes
Capacity	5.6 cu.ft.
True European convection fan	Yes
Oven functions	Bake, Broil, Convection bake, Convection broil, Convection roast, Airfry, Warm/proof
Number of racks	2 (1 standard + 1 telescopic)
Number of rack positions	6
Self clean	Yes / Steam
Delay Start	Yes
Sabbath Mode	Yes
Interior cavity	Grey enamel
Oven light	2 x G9 halogen
Bottom storage drawer	Yes
Included accessories	Airfry basket









SPECIFICATIONS AND DIMENSIONS

Dimensions	29.9” (W) x 25” (D) x 36” (H)
Front right dual zone	1200W / 1500W
Right rear dual zone	2300W / 3700W
Left front dual zone	1800W / 2100W
Left rear dual zone	1200W / 1500W
Oven elements	Top 3600W / Rear 2500W Bottom 2200W
Electrical Requirements	240V / 60Hz, 40A
Power cord included	Yes
Warranty	2 years parts and labor
UPC Code	628173081796

The information herein is based on sources we consider to be reliable. However, we cannot guarantee its accuracy. Details may also be incomplete and/or change without notice.

ACRI304S
30” STAINLESS STEEL INDUCTION RANGE

INSTALLATION

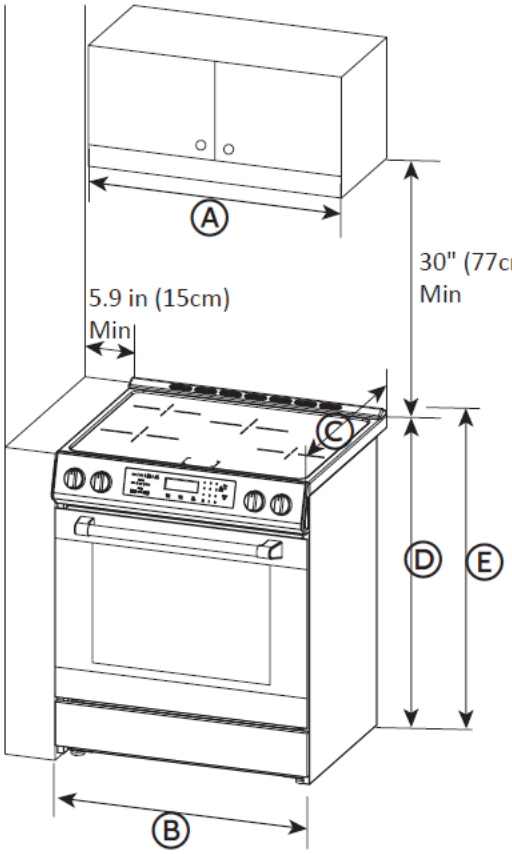

	Dimension
A	30 in (76 cm)
B	30 in (76 cm)
C	25 in (63.5 cm)
D	36 in (91.4 cm)
E	37 in (93.9 cm)

ELECTRICAL REQUIREMENTS

	Dimensions
A	30″
B	17.5″
C	7.25″
D	3″
E	Recommended Location For Electrical Outlet

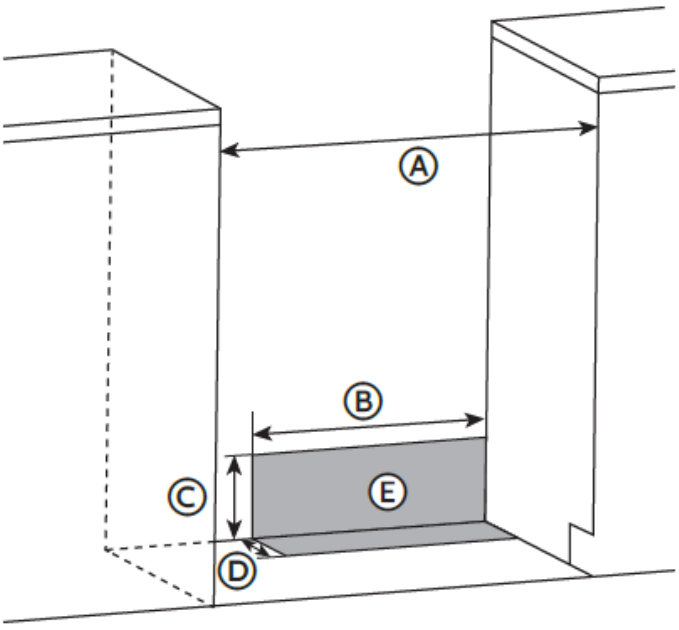

The information herein is based on sources we consider to be reliable. However, we cannot guarantee its accuracy. Details may also be incomplete and/or change without notice.