CAFÉ™ Professional Series 30" Smart Built-In Convection Double Wall Oven

CTD90DP2ZS1 / CTD90DP3ZD1 / CTD90DP4ZW2

CAFÉ

ALSO AVAILABLE IN

CTD90DP3ZD1
Matte Black with Brushed Stainless handles

CTD90DP4ZW2
Matte White with Brushed Bronze handles

This model requires a one-time WiFi connection to download oven features and functionality enabled by software. Follow instructions on your LCD screen on how to connect.

FEATURES & BENEFITS

This oven features True European Convection, an advanced convection system that uses a third heating element and reversing fan for the highest level of heat and air circulation

Simplify cooking with precision modes like artisan pizza, salmon, roasted vegetables, and bacon. Designed by our cooking scientists, these modes use tailored temperature and fan adjustments to track progress and deliver optimal results

Integrated Air Fry Mode technology that gives you crispy results in your oven without using oil

Enjoy a bright, intuitive 7-inch touch display that makes cooking effortless. Access multiple timers, weather updates, recipe apps, and saved favorite recipes with ease, and personalize the experience with your own images

CookCam with AI Technology monitors your meals in real time with live-streaming video on your smartphone without opening your oven door. The built-in camera can recommend a precision cooking mode with optimized temperature and fan adjustments

Say goodbye to guesswork with integrated tools that let you set and label multiple timers and use a built-in chatbot (on select models) for instant answers on temperatures, substitutions, conversions, and more

Set oven modes and timers by voice when your hands are full, making it easy to keep cooking moving without interruption. Effortlessly prep and host with hands-free control that fits seamlessly into your kitchen routine

Say hello to cooking in style with built-in premium Bluetooth® speaker. Easily connect your smartphone to stream your favorite music or podcasts, turning every meal into a more enjoyable, immersive experience

Get a custom look in the kitchen by selecting your favorite hardware and finish combination. Choose from Matte White, Matte Black and Stainless Steel finishes, and Brushed Copper, Brushed Bronze, Brushed Black and Brushed Stainless hardware

APPEARANCE

Handle	Brushed Stainless CAFÉ Pro Style Customizable
Installation	Above Warming Drawer Side-by-Side

FEATURES

Configuration	Double Oven
Cooking System	True European Convection with Direct Air (Both Ovens)
Oven Cleaning Type	Self-Clean with Steam Clean Option
Cleaning Time	Variable with Delay Clean Option
Oven Cooking Modes	Convection Bake Convection Bake Multi-Rack Convection Broil Hi/Lo Convection Roast Dehydrate Mode Thermal Bake Thermal Broil Hi/Lo Keep Warm Proof
Precision Cooking Modes	Artisan Pizza Mode Turkey Mode Steak Mode And More ...
Control Type	7" Full-Color Touch LCD Screen
Oven Rack Features	3 Heavy Duty Roller Racks 1 Heavy Duty Flat Rack 6 Embossed Rack Positions (Both Ovens)
Oven Control Features	12-Hour Shut-off Capability Control Lock Capability C° or F° Programmable Delay Time Unlimited Timers Microphone with Voice Control Mis-Wire Detection OU Sabbath Mode Oven Camera Premium Speaker Temperature Probe
Connected Capabilities via WiFi	Recipes Cooking Instruction Grocery List/Shop Streaming Audio Personalized Wallpaper Remote Control Weather
Oven Interior	2 Halogen Interior Oven Lights (Both Ovens) Black Gloss Finish Hidden Bake

CAPACITY

Capacity (Cu. Ft.)	5.0 Upper / 5.0 Lower

POWER / RATINGS

Amp Rating at 208V	40
Amp Rating at 240V	40
Bake Wattage	2,850W
Broiler Wattage	4,300W
Convection Wattage	2,400W
KW Rating at 208V	6.8
KW Rating at 240V	9

WEIGHTS & DIMENSIONS

Approximate Shipping Weight	278 lb
Net Weight	260 lb
Overall Height	51-1/16 in
Overall Width	29-3/4 in
Overall Depth	26-3/4 in
Cabinet Width	30 in
Cutout Dimensions (W x H x D) (in.)	28-1/2 x 50-1/4 x 23-1/2 (without pedestal) 28-1/2 x 51-13/16 min. / 51-15/16 max. x 23-1/2 (with pedestal)
Oven Interior Dimensions (lower)	25 x 17-3/8 x 20-1/4
Oven Interior Dimensions (upper)	25 x 17-3/8 x 20-1/4

CAFÉ™ Professional Series 30" Smart Built-In Convection Double Wall Oven

CTD90DP2ZS1 / CTD90DP3ZD1 / CTD90DP4ZW2

WARRANTY

Parts Warranty	Limited 1-Year Entire Appliance
Labor Warranty	Limited 1-Year Entire Appliance
Warranty Notes	See Written Warranty for Full Details

DIMENSIONS AND INSTALLATION INFORMATION

Wall coverings, countertops and cabinets surrounding the wall oven must be able to withstand a temperature of up to 200°F (94°C).

If the cabinet in which the wall oven is installed does not have a solid bottom, two braces or runners must be installed to support the weight of the oven. The runners and braces must support up to 400 lbs (181 kg).

Door handle protrudes 3" from door face. Cabinets and drawers on adjacent 45° and 90° walls should be placed to avoid interference with the handle.

ATTENTION INSTALLER: Electric wall ovens are NOT approved for installation with a plug and receptacle. They must be hard wired into an approved junction box.

IMPORTANT: Before installing, consult installation instructions packed with product for current dimensional data.

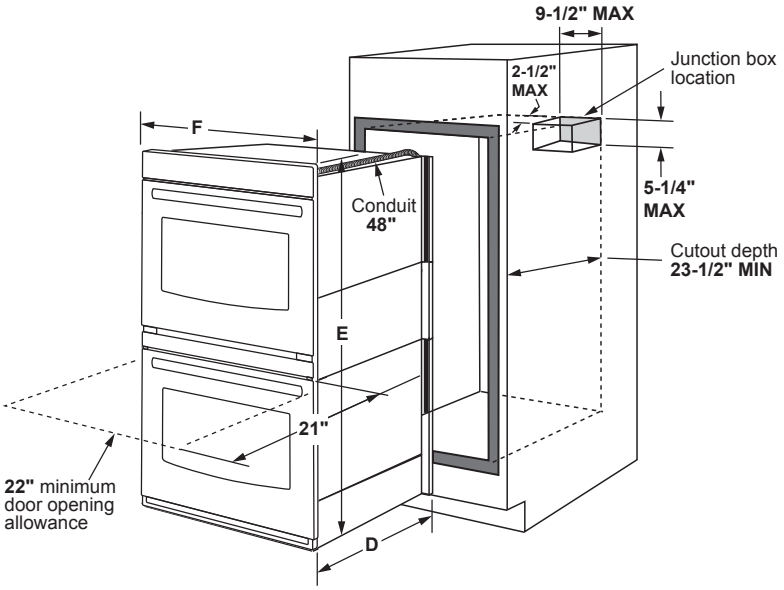

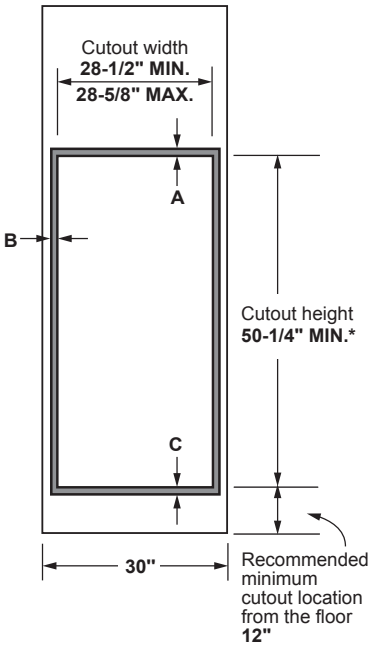

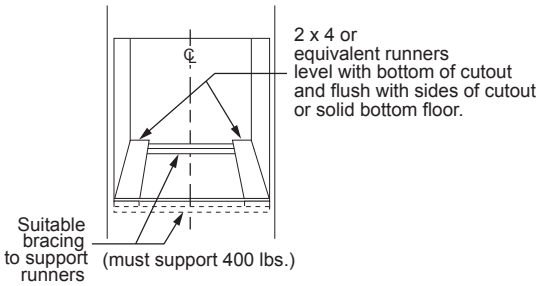

*Without pedestal: cutout height is 50-1/4" min.
With pedestal: cutout height is 51-13/16" min.-51-15/16" max.

Cabinet	30"
A - Overlap of oven at top of cutout	1"
B - Overlap of oven other side of edge of cutout	3/4"
C - Overlap of oven at bottom of cutout	1-1/4"
Oven	
D - Install depth	23-1/2"
E - Overall height without pedestal	51-1/16"
E - Overall height with pedestal	52-15/16"
F - Overall width	29-3/4"

Dimension and installation information are shown in inches.

CAFÉ™ Professional Series 30" Smart Built-In Convection Double Wall Oven

CTD90DP2ZS1 / CTD90DP3ZD1 / CTD90DP4ZW2

DIMENSIONS AND INSTALLATION INFORMATION

30" double electric wall ovens are approved for installation above 27" and 30" warming drawers.

WHEN TO USE THE PEDESTAL RAILS: When replacing an older GE Appliances 30" double wall oven with a new GE Appliances model. Cutout height = 51-1/16" to 52-15/16". This is our traditional cutout height.

WHEN NOT TO USE THE PEDESTAL RAILS: When replacing a 30" double wall oven from another manufacturer (i.e., Whirlpool) with a new GE Appliances model. Cutout height = 50-1/4". You will need to verify that the existing cutout matches the 50-1/4" dimension.

If the new GE Appliances 30" double wall oven is being installed into new construction (i.e., not a replacement), then the recommended installation is to use the pedestal rails.

ATTENTION INSTALLER: Electric wall ovens are NOT approved for installation with a plug and receptacle. They must be hard wired into an approved junction box.

IMPORTANT: Before installing, consult installation instructions packed with ALL products for current dimensional and combination data.

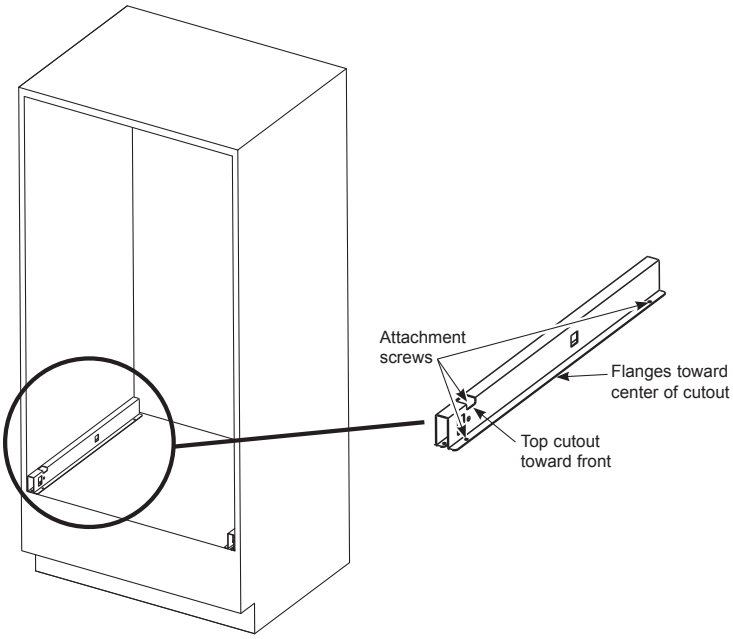

Dimension and installation information are shown in inches.

ADDITIONAL ACCESSORIES

CXWD0H0PMBZ
Brushed Bronze
2 handles
(Standard on Matte White)

CXWD0H0PMSS
Brushed Stainless
2 handles
(Standard on Matte Black)

CXWD0H0PMBT
Brushed Black
2 handles

CXWD0H0PMCU
Brushed Copper
2 handles

CXWD0H0PMCG
Brushed Brass
2 handles

CXWD0H0PMFB
Flat Black
2 handles

© 2026 GE Appliances