Installation Instructions

27” & 30” Electric Built-In Wall Ovens

Questions? Call us at 1.800.432.2737 or visit GEAppliances.com.
In Canada, call 1.800.561.3344 or visit GEAppliances.ca.

BEFORE YOU BEGIN

Read these instructions carefully and completely.

- **IMPORTANT** – Save these instructions for local inspector’s use.
- **IMPORTANT** – Observe all governing codes and ordinances.
- **Note to Installer –** Be sure to leave these instructions with Consumer.
- **Note to Consumer –** Keep these instructions for future reference.
- **Skill level –** Installation of this appliance requires a qualified installer or electrician.
- Proper installation is the responsibility of the installer.
- Product failure due to improper installation is not covered under Warranty.
- Product is for indoor use only.

ATTENTION INSTALLER: All electric wall ovens must be hard wired (direct wired) into an approved junction box. A plug and receptacle is NOT permitted on these products.

FOR YOUR SAFETY:

⚠WARNING Before beginning the installation, switch power off at the service panel and lock the service disconnecting means to prevent power from being switched on accidentally. When the service disconnecting means cannot be locked, securely fasten a prominent warning device, such as a tag, to the service panel.

Be sure the oven is securely installed in a cabinet that is firmly attached to the house structure. Weight on the oven door could cause the oven to tip and result in injury. Never allow anyone to climb, sit, stand or hang on the oven door.

Make sure the wall coverings, counters and cabinets around the oven can withstand the heat (up to 200°F [93.3°C]) generated by the oven.

31-2003973 Rev. 1 05-26

Installation Instructions

TOOLS YOU MAY NEED

1/8” Drill Bit and Electric or Hand Drill
T20 Screwdriver
Phillips Screwdriver
Wire Strippers
7/16” Nut Driver
1/4” Nut Driver
3/16” hex key (French Door only)
1/8” hex key (French Door only)
Gloves
Safety Glasses

MATERIALS YOU MAY NEED

Junction Box
Wire Nuts
Strain Relief Clamp for 1/2” Conduit
36” (91 cm) of String

DESIGN INFORMATION

SINGLE OVEN INSTALLATIONS

The single oven may be installed in a cabinet alone or above a warming drawer. The single oven may be installed side by side. However, the Push-to-Open wall oven is not allowed under a counter unit or cooktop. See the label on top of the oven for approved models.

DOUBLE AND COMBINATION OVEN INSTALLATIONS

A double or combination oven may be installed in a cabinet alone or above a warming drawer. See the label on top of the oven for approved models.

French Door ovens are not allowed to be installed flush to the front surface of the cabinet.

IMPORTANT: Always refer to individual installation instructions packed with each product for specific requirements.

Installation Instructions

1 REMOVE PACKAGING MATERIALS

Failure to remove packaging materials could result in damage to the appliance. Remove all packing parts from oven, racks and heating elements. Remove protective film and labels on the outer door and control panel. Also, remove plastic on trims and panel, all tape around the oven and any shipping screws securing the oven to the base pad. Open oven door and remove literature pack and oven racks. Remove the bottom trim from the top of the oven. It will be installed at the end of the installation process. The trim is wrapped separately and taped to the top of the unit. Remove pedestal rails from separate box and set aside (30” Double Wall Ovens Only).

Consider recycling options for your appliance packaging material.

1 A SHIPPING SCREWS REMOVAL (FOR 30” COMBINATION OVEN UPPER OVEN ONLY)

Shipping screws must be removed as shown in illustration. You will need a 1/4” Nut Driver.

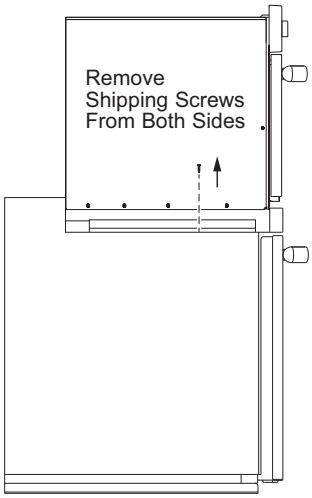

2 PREPARE THE OPENING

NOTE: If the cabinet does not have a solid bottom, two braces or runners must be installed to support the weight of the oven. For single ovens, the runners and braces must support 220 lbs (99 kg). For double and combination ovens, the runners and braces must support 400 lbs. (181 kg).

NOTE: If marks, blemishes or the cutout opening are visible above the installed oven, it may be necessary to add wood shims under the runners until the marks or opening are covered.

NOTE: If the cabinet does not have a front frame and the sides are less than ¾” (1.9 cm) thick, shim both sides equally to establish the cutout width.

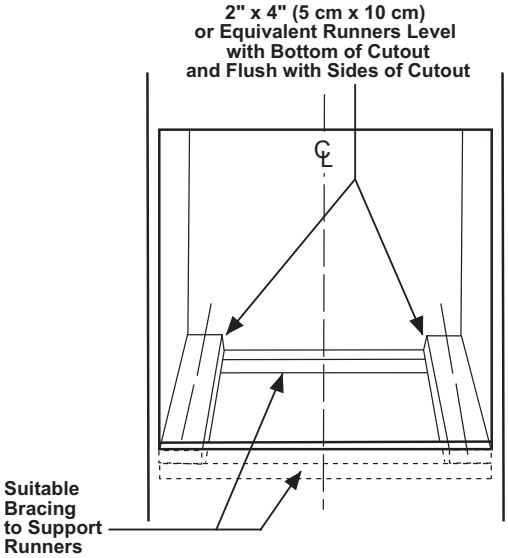

2 A CUTOUT FOR SINGLE OVENS IN WALL CABINET

NOTE: If the cabinet does not have a front frame and the sides are less than ¾" (1.9 cm) thick, shim both sides equally to establish the cutout width.

These ovens are not approved for installations that stack one single wall oven above another single wall oven.

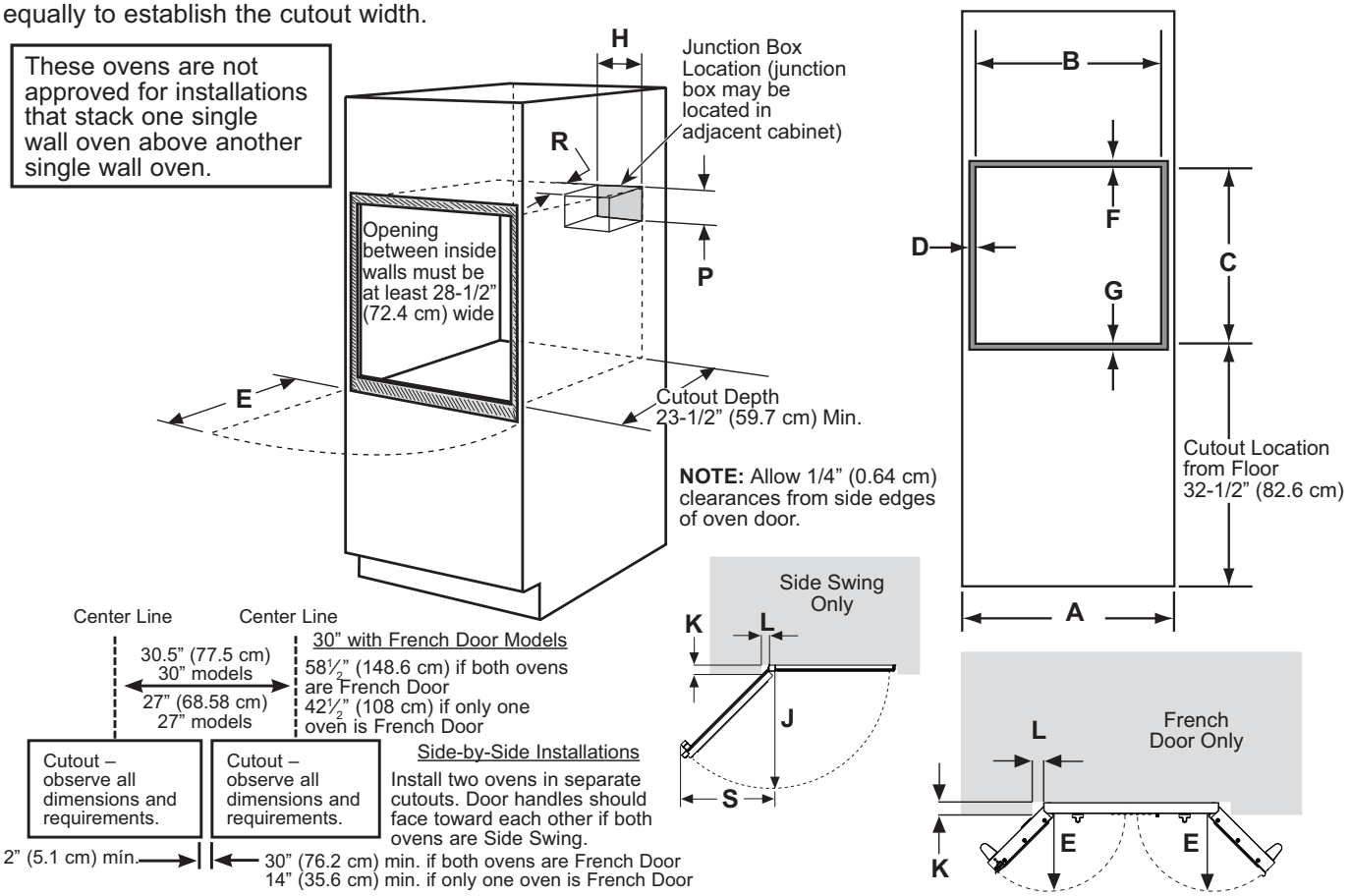

Dims.	Dimension Description	27" Single Oven	30" Single Oven
A	Cabinet Width	27" (68.6 cm)	30" (76.2 cm)
B	Cutout Width	25" (63.5 cm) min. 25¼" (64.1 cm) max.	28½" (72.4 cm) min. 28⅝" (72.7 cm) max.
C	Cutout Height	27⅝" (70.2 cm) min. 28⅛" (71.4 cm) max.	27¼" (69.2 cm) min. 27 5/16" (69.4 cm) max.
D	Clearance from cutout - side edges*	1" (2.5 cm)	11/16" (1.75 cm)
E	Clearance to Adjacent Corners, Drawers, Walls, etc., When Door Is Open	23" (58.4 cm) min.	23" (58.4 cm) min.
F	Clearance from cutout - top*	1" (2.5 cm) min.	1" (2.5 cm) min. (1¼" (3.2 cm) for PT9050, ZET1S and ZET1P)
G	Clearance from cutout - bottom*	1" (2.5 cm) min.	1¼" (3.2 cm)
H	Junction Box Location	8¾" (22.2 cm) max. right side only	9½" (24.1 cm) max. right side only
J	Door swing depth - Allow additional clearances for installation and oven usage		31⅛" (77.8 cm) min. 14" (35.6 cm) min.French Door Only
K	Countertop or cabinet door protrusion (measure if exist)		Measure "K"
L	Gap between edge of countertop or cabinet door to cabinet opening		If K = 0, L = 0, Otherwise K = L + 1" (2.54 cm) min.
P	Junction Box location	5-1/4" (13.34 cm) max.	5-1/4" (13.34 cm) max.
R	Junction Box location	2-1/2" (6.35 cm) max.	2-1/2" (6.35 cm) max.
S	Door swing width - Allow additional clearances for installation and oven usage		24" (61 cm) min. French Door Only

* Refers to minimum clearance required for wall oven installation and does not reflect actual product dimensions.

2 B CUTOUT FOR SINGLE OVENS – UNDER COUNTER

NOTE: These ovens are only approved to be installed under the specific models as labeled on the unit.

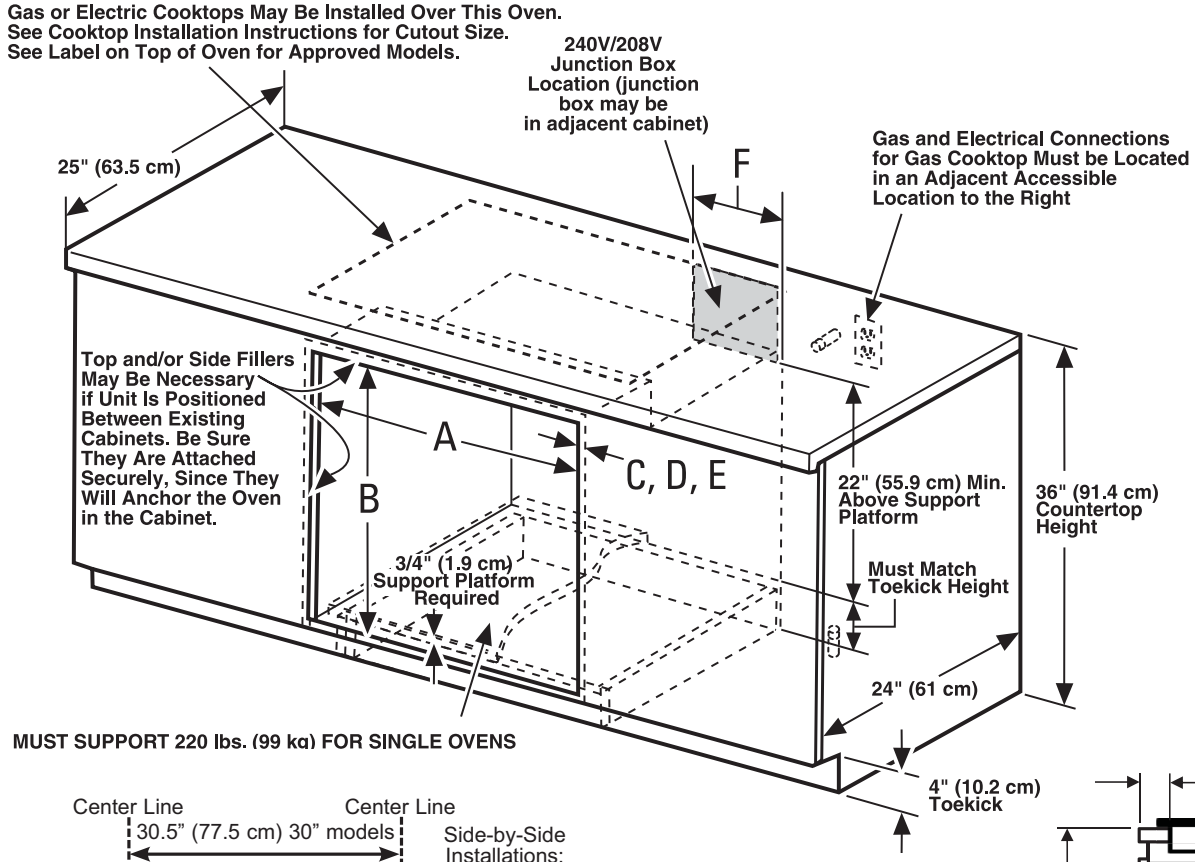

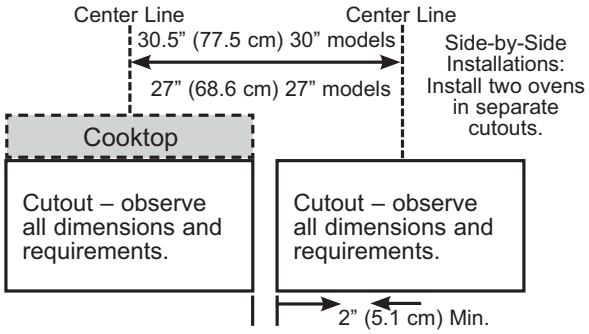

NOTE: One cooktop may be centered over either oven in the side-by-side installation.

IMPORTANT: Maintain a minimum distance of 31-1/4" from the top surface of the countertop to the wall oven platform to ensure that the cooktop and wall oven do not interfere with each other (see picture).

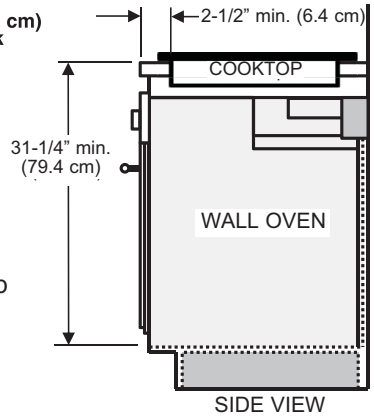

Dimension	Dimension Description	27" Single Oven	30" Single Oven
A	Cabinet Width	25" (63.5 cm) min. 25 1/4" (64.1 cm) max.	28 1/2" (72.4 cm) min. 28 5/8" (72.7 cm) max.
B	Cutout Height	27 5/8" (70.2 cm) min. 28 1/8" (71.4 cm) max.	27 1/4" (69.2 cm) min. 27 5/16" (69.4 cm) max.
C	Clearance from cutout - top*	1" (2.5 cm)	1" (2.5 cm) (1 1/4" (3.2 cm) for PT9050 ZET1S and ZET1P)
D	Clearance from cutout - bottom*	1" (2.5 cm)	1 1/4" (3.2 cm)
E	Clearance from cutout - side edges*	1" (2.5 cm)	11/16" (1.75 cm)
F	Junction Box Location	8 3/4" (22.2 cm) max. right side only	9 1/2" (24.1 cm) max. right side only

* Refers to minimum clearance required for wall oven installation and does not reflect actual product dimensions.

Continue to Section 4.

2 C CUTOUT FOR DOUBLE OVENS (2 THERMAL OVENS)

NOTE: If the cabinet does not have a front frame and the sides are less than ¾" (1.9 cm) thick, shim both sides equally to establish the cutout width.

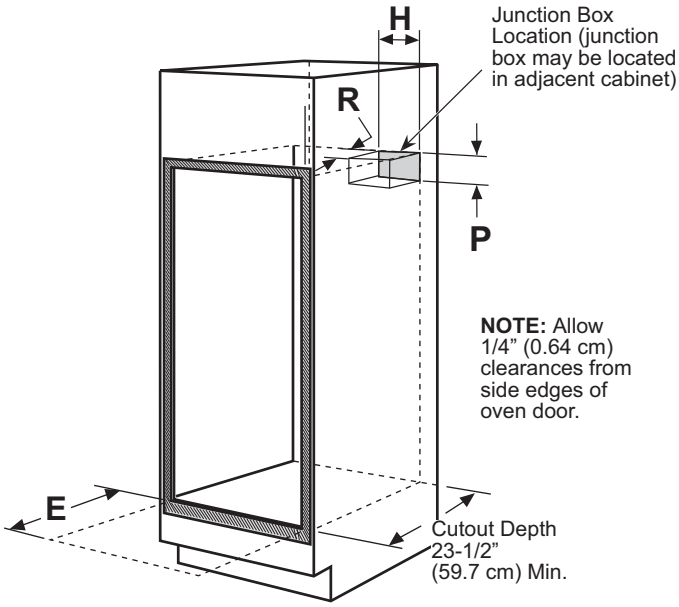

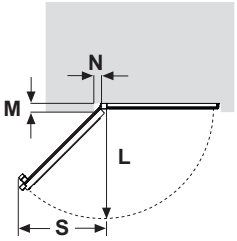

LH door swing shown.
RH door swings opposite.

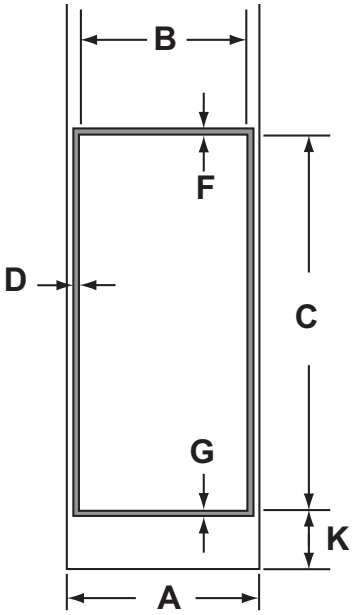

Dimensions	Description	27" Double Oven	30" Double Oven with Pedestal	30" Double Oven without Pedestal
A	Cabinet Width	27" (68.6 cm)	30" (76.2 cm)	30" (76.2 cm)
B	Cutout Width	25" (63.5 cm) min. 25¼" (64.1 cm) max.	28½" (72.4 cm) min. 28⅝" (72.7 cm) max.	28½" (72.4 cm) min. 28⅝" (72.7 cm) max.
C	Cutout Height	49 11/16" (126.2 cm) min. 50⅛" (127.3 cm) max.	51 13/16" (131.6 cm) min. 51 15/16" (131.9 cm) max.	50 ¼" (127.64cm)
D	Clearance from cutout - side edges*	1" (2.5 cm)	11/16" (1.75 cm)	11/16" (1.75 cm)
E	Clearance to Adjacent Corners, Drawers, Walls, etc., When Door Is Open	23" (50.8 cm) min.	23" (53.3 cm) min.	23" (53.3 cm) min.
F	Clearance from cutout - top*	1" (2.5 cm) min.	1" (2.5 cm) min. (1¼" (3.2 cm) for PT9550, ZET2S and ZET2P)	1" (2.5 cm) min. (1¼" (3.2 cm) for PT9550, ZET2S and ZET2P)
G	Clearance from cutout - bottom*	1" (2.5 cm) min.	1¼" (3.2 cm)	1¼" (3.2 cm)
H	Junction Box Location	8¾" (22.2 cm) max. right side only	9½" (24.1 cm) max. right side only	9½" (24.1 cm) max. right side only
K	Cutout Location from Floor	13¼" (33.7 cm) min.	12" (30.5 cm) min.	12" (30.5 cm) min.
L	Door swing depth - Allow additional clearances for installation and oven usage		31⅛" (77.8 cm) min.	31⅛" (77.8 cm) min.
M	Countertop or cabinet door protrusion (measure if exist)		Measure "M"	Measure "M"
N	Gap between edge of countertop or cabinet door to cabinet opening		If M = 0, N = 0, Otherwise N = M + 1" (2.54 cm) min.	If M = 0, N = 0, Otherwise N = M + 1" (2.54 cm) min.
P	Junction Box location	5-1/4" (13.34 cm) max.	5-1/4" (13.34 cm) max.	5-1/4" (13.34 cm) max.
R	Junction Box location	2-1/2" (6.35 cm) max.	2-1/2" (6.35 cm) max.	2-1/2" (6.35 cm) max.
S	Door swing width - Allow additional clearances for installation and oven usage		24" (61 cm) min.	24" (61 cm) min.

* Refers to minimum clearance required for wall oven installation and does not reflect actual product dimensions.

Continue to Section 3.

2 D CUTOUT FOR COMBINATION OVENS (WITH UPPER MICROWAVE OVEN)

NOTE: If the cabinet does not have a front frame and the sides are less than ¾" (1.9 cm) thick, shim both sides equally to establish the cutout width.

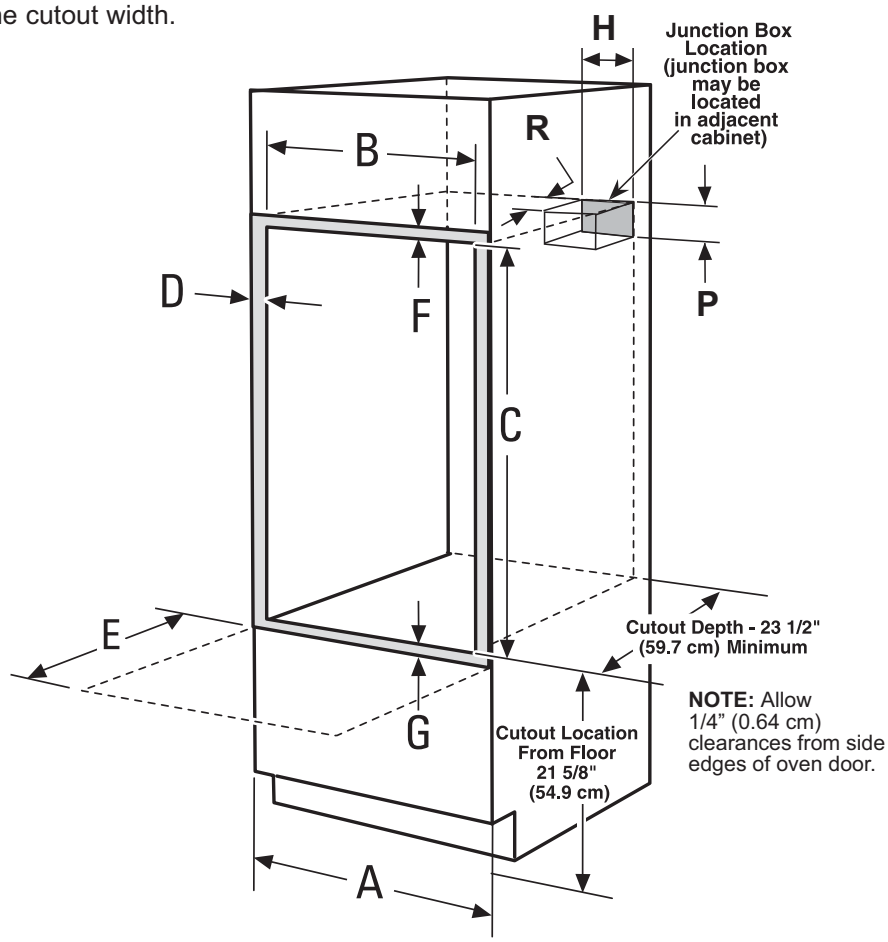

NOTE: Allow 1/4" (0.64 cm) clearances from side edges of oven door.

Dimensions	Description	27" Oven with Microwave	30" Oven with Microwave
A	Cabinet Width	27" (68.6 cm)	30" (76.2 cm)
B	Cutout Width	25" (63.5 cm) min. 25¼" (64.1 cm) max.	28½" (72.4 cm) min. 28⅝" (72.7 cm) max.
C	Cutout Height	41⅛" (104.5 cm) min. 41¼" (104.8 cm) max.	42 3/16" (107.2 cm) min. 42¼" (107.3 cm) max.
D	Clearance from cutout - side edges*	1" (2.5 cm)	11/16" (1.75 cm)
E	Clearance to Adjacent Corners, Drawers, Walls, etc., When Door Is Open	23" (58.4 cm) min.	23" (58.4 cm)
F	Clearance from cutout - top*	1" (2.5 cm) min.	1" (2.5 cm) min.
G	Clearance from cutout - bottom*	1" (2.5 cm) min.	1¼" (3.2 cm)
H	Junction Box Location	8¾" (22.2 cm) max. right side only	9½" (24.1 cm) max. right side only
P	Junction Box location	5-1/4" (13.34 cm) max.	5-1/4" (13.34 cm) max.
R	Junction Box location	2-1/2" (6.35 cm) max.	2-1/2" (6.35 cm) max.

* Refers to minimum clearance required for wall oven installation and does not reflect actual product dimensions.

Continue to Section 2E.

2 E SECURING UPPER MICROWAVE/ADVANTIUM OVEN TO CABINET

For double oven with microwave or Advantium upper ovens. Secure a wooden cleat to side of cabinet so that the upper oven can be secured to the cleat with provided screws

27” Cabinet requirements

- No shims (or cleats) required when cabinet is in minimum width condition.
- If cabinet is at maximum width condition, add wood shims to bring cabinet to minimum condition.

30” Cabinet requirements

- No shims (or cleats) required when cabinet is in minimum width condition.
- If cabinet is at maximum width condition, fix the wood cleats as shown in illustration.

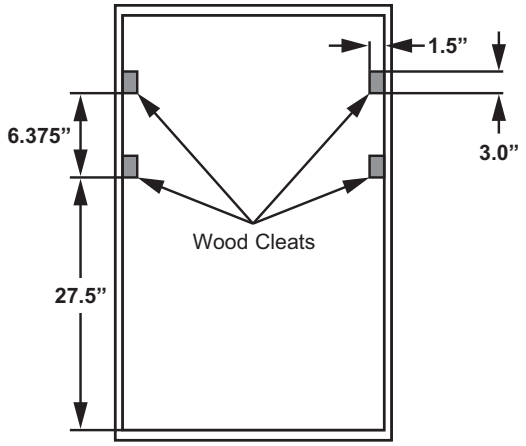

Cleat locations on 30” cabinet with maximum cutout condition

2 F FRENCH DOOR ONLY: CUTOUT UNDER A MICROWAVE/ADVANTIUM AND OVER A WARMING DRAWER

NOTE: Install the oven only with specific models listed on the label located on top of the oven.

NOTE: Additional clearances between cutouts may be required. Check to be sure the oven supports above the Warming Drawer location do not obstruct the required interior depth and height.

When installing a Warming Drawer below a single or double oven, a separate 120V, 60 HZ, properly grounded receptacle must be installed. Refer to installation instructions packed with the Warming Drawer for specific installation requirements.

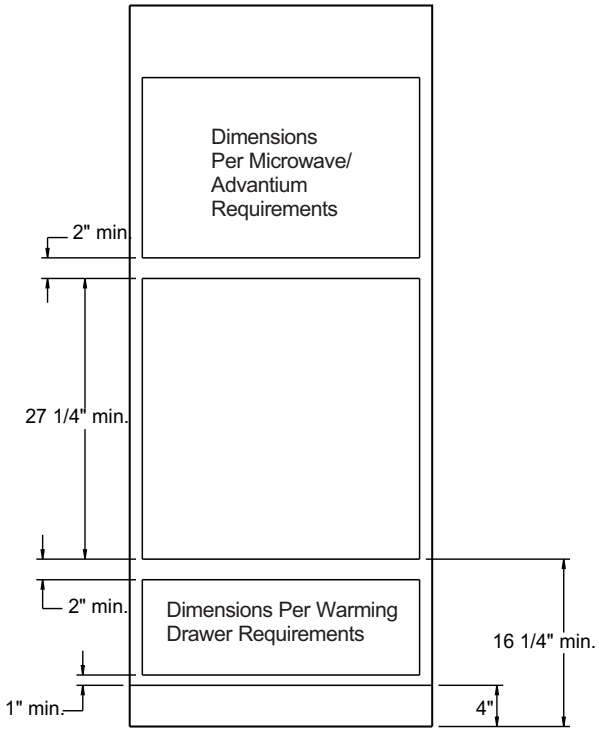

2 G CUTOUT FOR INSTALLATION OVER A WARMING DRAWER

NOTE: Install the oven only with specific models listed on the label located on top of the oven.

NOTE: Additional clearances between cutouts may be required. Check to be sure the oven supports above the Warming Drawer location do not obstruct the required interior depth and height.

When installing a Warming Drawer below a single, double, or combination oven, a separate 120V, 60 HZ, properly grounded receptacle must be installed. Refer to installation instructions packed with the Warming Drawer for specific installation requirements.

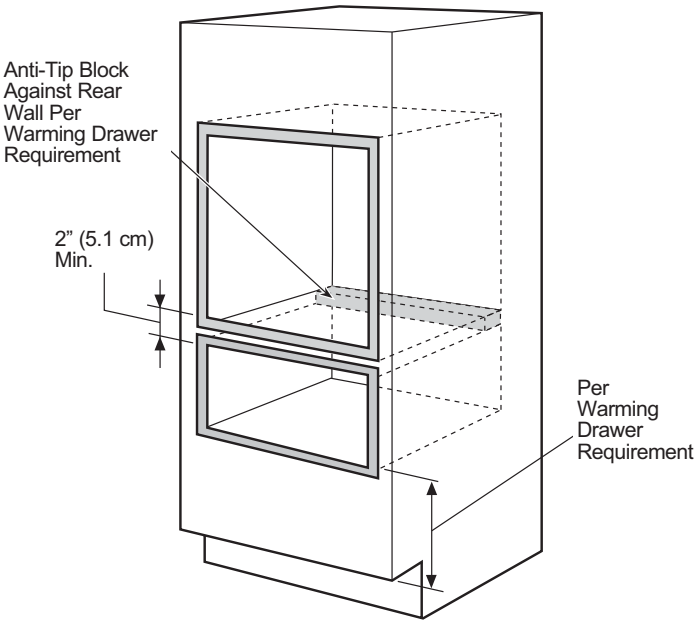

Continue to Section 3 for Double Wall Oven with Pedestal. Otherwise, continue to Section 4.

2 H BUILT-IN WALL OVEN FLUSH INSET INSTALLATION INSTRUCTIONS

ADDITIONAL MATERIALS YOU WILL NEED

- Clean Release Masking Tape – 2" width (min)

PREPARATION

1. Measure your cabinet to ensure all dimensions match the specific flush inset requirements for your model (see chart).
2. Apply Clean Release Masking Tape to all cabinet faces for protection while installing the unit. For each edge of the cabinet opening, start tape 1/2" in from cabinet face and wrap around front face to protect edges. Ensure tape extends around the entire opening - top, bottom, and both sides.

INSTALLATION

1. Follow main instructions for product installation.
2. Remove Clean Release Masking Tape before driving the mounting screws and trapping it in place.
3. Complete remaining steps of installation.

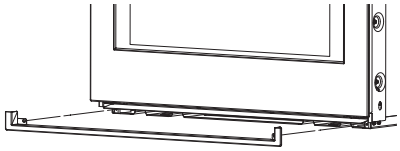

1. Bottom trim flush installation

2. Extruded aluminum trim flush installation

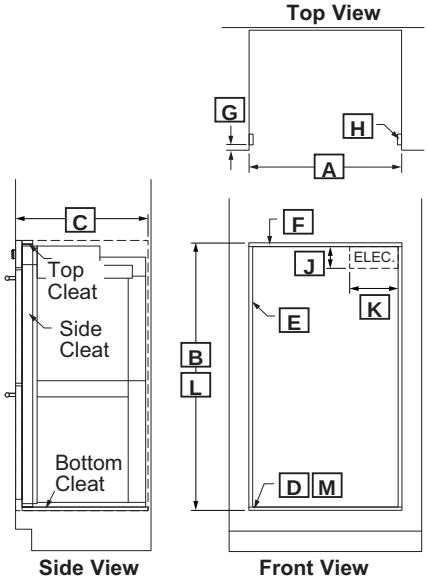

Allow 1/8" clearances from side edges of oven door.

2 H BUILT-IN WALL OVEN FLUSH INSET INSTALLATION INSTRUCTIONS (Cont.)

			30”							
			Single Wall Oven				Double Wall Oven			
1. Bottom trim flush installation			PTS7000 PTS9000	CTS70DM CTS90DM	ZTS90DS ZTSX1DS	ZTS90DP ZTSX1DP	PTD7000 PTD9000	CTD70DM CTD90DM	ZTD90DS ZTDX1DS	ZTD90DP ZTDX1DP
Cutout	**A**	Minimum cutout width with 1/8” side reveals	30	30	30	30	30	30	30	30
	B	Minimum cutout height with 1/8” top reveal, 1/4” bottom reveal	29	29	29-1/16	29-1/16	51-1/2	51-1/2	51-9/16	51-9/16
	C	Minimum cutout depth	24-3/4	24-3/4	24-15/16	24-15/16	24-3/4	24-3/4	24-15/16	24-15/16
Cleats	**D**	Bottom cleat thickness – extends full depth of cabinet	11/16	11/16	11/16	11/16	11/16	11/16	11/16	11/16
	E	Side cleat thickness	3/4	3/4	3/4	3/4	3/4	3/4	3/4	3/4
	F	Top cleat thickness	1-1/16	1-1/16	1-1/8	1-1/8	5/8	5/8	5/8	5/8
	G	Setback – all cleats	1-1/4	1-1/4	1-3/8	1-7/16	1-1/4	1-1/4	1-3/8	1-7/16
**	**H**	Depth - side and top cleats	2-1/2	2-1/2	2-1/2	2-1/2	2-1/2	2-1/2	2-1/2	2-1/2
Electrical Junction Box	**J**	Vertical from upper right corner	5-1/4	5-1/4	5-1/4	5-1/4	5-1/4	5-1/4	5-1/4	5-1/4
	K	Horizontal from upper right corner	9-1/2	9-1/2	9-1/2	9-1/2	9-1/2	9-1/2	9-1/2	9-1/2
2. Extruded aluminum trim flush installation					ZTSX1DS ZX30VT1*	ZTSX1DP ZX30VT1*			ZTDX1DS ZX30VT2*	ZTDX1DP ZX30VT2*
Cutout	**L**	Minimum cutout height with 1/8” top reveal, 1/8” bottom reveal			28-5/8	28-5/8			51-1/8	51-1/8
Cleats	**M**	Bottom cleat thickness – extends full depth of cabinet			1/4	1/4			1/4	1/4

			27”							
			Single Wall Oven				Double Wall Oven			
1. Bottom trim flush installation			PKS7000	CKS70DM	ZKS90DS	ZKS90DP	PKD7000	CKD70DM	ZKD90DS	ZKD90DP
Cutout	**A**	Minimum cutout width with 1/8” side reveals	27	27	27	27	27	27	27	27
	B	Minimum cutout height with 1/8” top reveal, 1/4” bottom reveal	29-3/16	29-3/16	29 -1/4	29 -1/4	51-1/2	51-1/2	51-9/16	51-9/16
	C	Minimum cutout depth	24-3/4	24-13/16	24-15/16	24-15/16	24-3/4	24-13/16	24-15/16	24-15/16
Cleats	**D**	Bottom cleat thickness – extends full depth of cabinet	11/16	11/16	11/16	11/16	11/16	11/16	11/16	11/16
	E	Side cleat thickness	1	1	1	1	1	1	1	1
	F	Top cleat thickness	7/8	7/8	15/16	15/16	1-1/8	1-1/8	1-3/16	1-3/16
	G	Setback – all cleats	1-1/4	1-5/16	1-3/8	1-7/16	1-1/4	1-5/16	1-3/8	1-7/16
**	**H**	Depth - side and top cleats	2-1/2	2-1/2	2-1/2	2-1/2	2-1/2	2-1/2	2-1/2	2-1/2
Electrical Junction Box	**J**	Vertical from upper right corner	5-1/4	5-1/4	5-1/4	5-1/4	5-1/4	5-1/4	5-1/4	5-1/4
	K	Horizontal from upper right corner	9-1/2	9-1/2	9-1/2	9-1/2	9-1/2	9-1/2	9-1/2	9-1/2
2. Extruded aluminum trim flush installation					ZX27VT1*	ZX27VT1*			ZX27VT2*	ZX27VT2*
Cutout	**L**	Minimum cutout height with 1/8” top reveal, 1/8” bottom reveal			28-13/16	28-13/16			51-1/8	51-1/8
Cleats	**M**	Bottom cleat thickness – extends full depth of cabinet			1/4	1/4			1/4	1/4

All dimensions shown are in inches.
* Accessory Trim Kits sold as aftermarket only
**For Combination Installations Cooktop over Wall Oven use a cleat depth of 1 ½.

3 A DETERMINING WHEN TO USE THE PEDESTAL (30” DOUBLE OVENS ONLY)

WHEN TO USE THE PEDESTAL

When replacing an older GE Appliances 30” double wall oven with a new GE Appliances model. Cutout height = 51-13/16” to 51-15/16”. This is our traditional cutout height.

WHEN NOT TO USE THE PEDESTAL

When replacing a 30” double wall oven from another manufacturer (ie. Whirlpool) with a new GE Appliances 30” double wall oven. Cutout height = 50-1/4”. You will need to verify that the existing cutout matches the 50-1/4” dimension.

If the new GE Appliances 30” double wall oven is being installed into new construction (ie. not a replacement), then the recommended installation is to use the Pedestal.

3 B PEDESTAL RAIL INSTALLATION (30” DOUBLE OVENS ONLY)

A. Position the pedestal rails with the top cutout toward the front of the opening and the flanges on the bottom, pointing toward the center. Locate each rail on the floor or cabinet runner, slightly inward from the side of the cabinet. Make sure the front of each rail is not protruding beyond the front of the cabinet opening.

B. Drill pilot holes and attach rails to runner or bottom of cabinet with provided hardware.

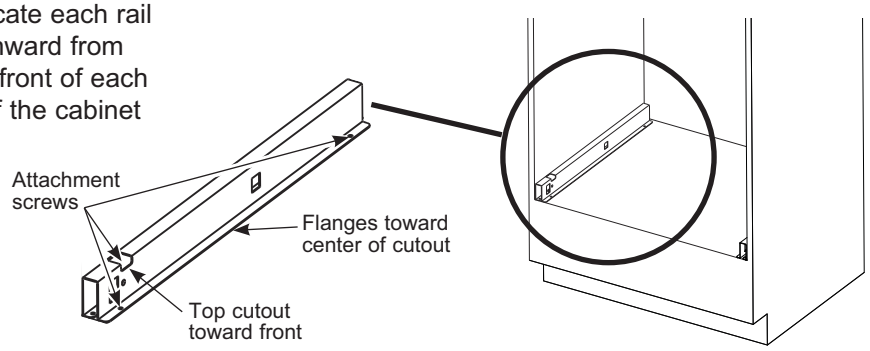

4 DOOR REMOVAL AND INSTALLATION INSTRUCTIONS (RECOMMENDED FOR THERMAL OVENS)

⚠WARNING The door for the microwave oven on a combination oven should never be removed, unless by a certified technician.

NOTE: Door removal is not a requirement for installation of the product but is an added convenience.

On ovens with camera: Before removing the door, disconnect the camera harness by unhooking the connector that is snapped into the bottom of the door.

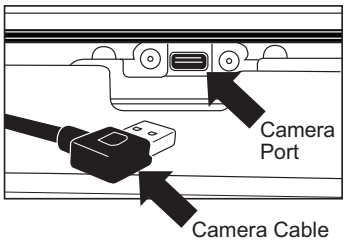

Upper Oven Door (Twinflex models only)

The upper door contains many of the electronics and controls for the oven. It is recommended that the upper door be removed only by a trained service technician.

Lower Oven Door (on some models)

The lower door is very heavy. Be careful when removing and lifting the door. Do not lift the door by the handle.

To remove the door:

A. Open the oven door as far as it will go.

B. Remove hinge bracket, if equipped, from front frame and set aside. The hinge bracket must be replaced, if equipped, for proper door functionality when door is reinstalled.

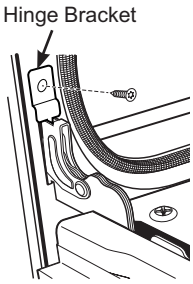

C. Push both hinge locks down toward the door frame to the unlocked position. This may require a flat-blade screwdriver. DO NOT LIFT THE DOOR BY THE HANDLE!.

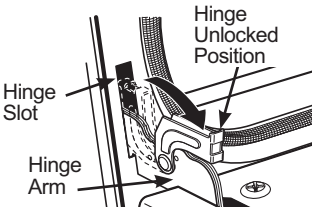

D. Place hands on both sides of the door and close the oven door to the removal position (approximately 1”–2” [2.5 cm–5.1 cm] from the closed position).

E. Lift the door up and out until the hinge arms clear the slots. **NOTE:** The oven door is very heavy. Be sure you have a firm grip before lifting the oven door off the hinges. Use caution once the door is removed. Do not lay the door on its handle. This could cause dents or scratches.

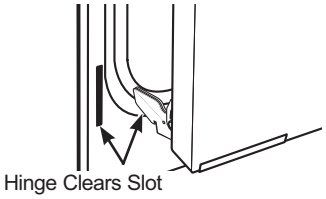

4 A DOOR STRIKE ADJUSTMENT (SIDE-SWING MODELS ONLY)

Description: The strike on the unit keeps the door closed during cooking and protrudes from the inside of the oven structure. The strike angle can be adjusted if the door is too difficult or easy to open or close.

Procedure: Use a standard pair of smooth jawed pliers to apply pressure downward or upward on the strike, to customer’s preference.

- Difficult to open: Apply pressure downward to give the strike an additional 1-6° bend.
- Easy to open/close: Apply pressure upward until the desired opening and closing force is achieved.

NOTE: Small adjustments are recommended to avoid major changes in door push and pull forces

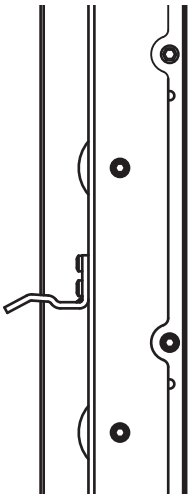

5 ELECTRICAL REQUIREMENTS

⚠WARNING This appliance must be properly grounded.

⚠WARNING To prevent fire or shock, do not use an extension cord with this appliance.

⚠WARNING To prevent shock, remove house fuse or open circuit breaker before beginning installation.

⚠WARNING Improper connection of aluminum house wiring to copper leads can result in an electrical hazard or fire. Use only connectors designed for joining copper to aluminum and follow the manufacturer's recommended procedure closely.

We recommend you have the electrical wiring and hookup of your appliance connected by a qualified electrician. After installation, have the electrician show you how to disconnect power from the appliance.

You must use a single-phase, 120/208 VAC or 120/240 VAC, 60 Hertz electrical system. If you connect to aluminum wiring, properly installed connectors approved for use with aluminum wiring must be used.

Effective January 1, 1996, the National Electrical Code requires that new construction (not existing) utilize a four-conductor connection to an electric oven. When installing an electric oven in new construction, a mobile home, recreational vehicle or an area where local codes prohibit grounding through the neutral conductor, refer to the section on four-conductor branch circuit connections.

Check with your local utilities for electrical codes which apply in your area. Failure to wire your oven according to governing codes could result in a hazardous condition. If there are no local codes, your oven must be wired and fused to meet the National Electrical Code, NFPA No. 70 – latest edition, available from the National Fire Protection Association.

This appliance must be supplied with the proper voltage and frequency and connected to an individual, properly grounded branch circuit, protected by a circuit breaker or fuse. See the rating plate located on the oven frame to determine the rating of the product.

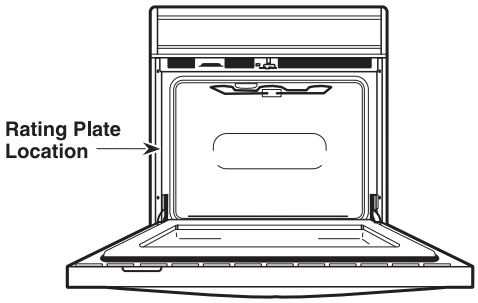

Rating plate is located on the oven side trim.

Use the chart below to determine the minimum recommended dedicated circuit protection:

KW Rating 240V	KW Rating 208V	Recommended Circuit Size (Dedicated)
≤4.8 KW	≤4.1 KW	20 Amp
4.9 KW–7.2 KW	4.2 KW–6.2 KW	30 Amp
7.3 KW–9.6 KW	6.3 KW–8.3 KW	40 Amp
9.7 KW–12.0 KW	8.4 KW–10.4 KW	50 Amp

DO NOT shorten the flexible conduit. The conduit strain relief clamp must be securely attached to the junction box and the flexible conduit must be securely attached to the clamp. If the flexible conduit will not fit within the clamp, do not install the oven until a clamp of the proper size is obtained.

The 3 power leads supplied with this appliance are suitable for connection to heavier gauge household wiring. The insulation of these 3 leads is rated for temperatures much higher than the temperature rating of the household wiring. The current-carrying capacity of the conductor is governed by the wire gauge and the temperature rating of the insulation around the wire.

6 MAKE ELECTRICAL CONNECTIONS

⚠WARNING Switch power off at the service panel and lock the service disconnecting means to prevent power from being switched on accidentally. When the service disconnecting means cannot be locked, securely fasten a prominent warning device, such as a tag, to the service panel.

Place oven on table or platform even with the cutout opening. For a single oven, the platform must support 220 lbs. (99 kg); for a double or combination oven, the platform must support 400 lbs. (181 kg). Connect the flexible conduit to the electrical junction box as shown below*. Position the conduit in such a manner that it will lie behind the unit in a natural loop when the oven is installed**. You will need to purchase an appropriate strain relief clamp to complete the connection of the conduit to the junction box.

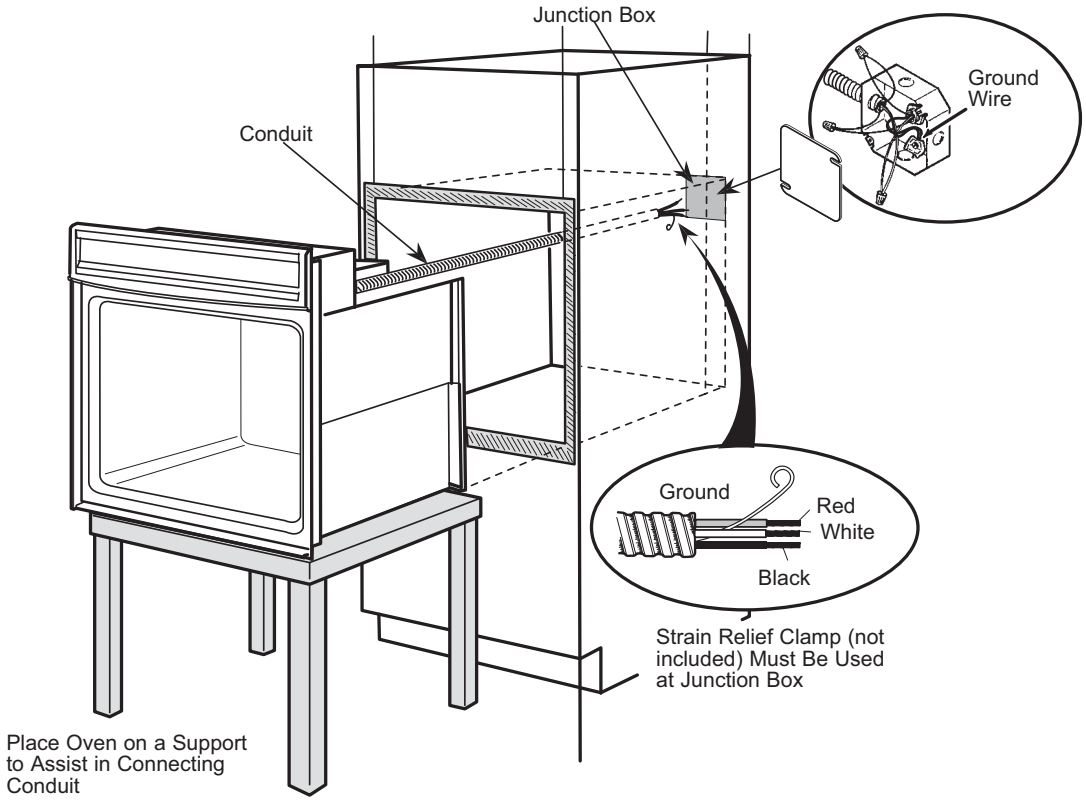

*Ovens come equipped with a 40” long conduit. If a longer conduit is desired, there may be one available for your model. To check availability or order parts, call GE Appliances at 1.800.GE.CARES.

**Combination Oven with upper microwave oven - it is recommended to install the conduit through the side of the junction box as shown in the illustration above.

7 THREE-CONDUCTOR BRANCH CIRCUIT CONNECTION

NOTE: If residence leads are aluminum conductors, see **WARNING** in Section 5, Electrical Requirements.

When connecting to a three-conductor branch circuit, if local codes permit:

A. Connect the oven ground conductor along with the neutral (white) lead to the branch circuit neutral (white or gray in color), using a wire nut.

B. Connect the oven red lead to the branch circuit red lead and the oven black lead to the branch circuit black lead in accordance with local codes, using wire nuts.

C. Install proper strain relief clamp.

D. Install junction box cover.

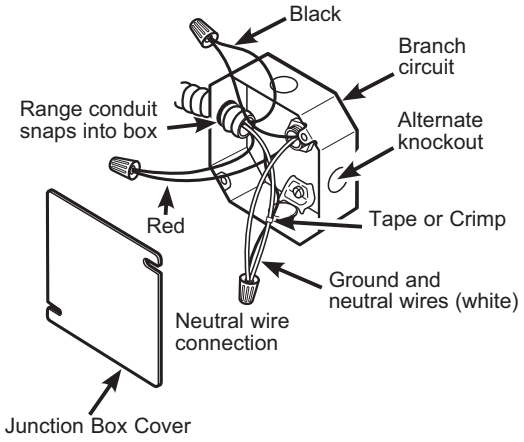

8 FOUR-CONDUCTOR BRANCH CIRCUIT CONNECTION

NOTE: If residence leads are aluminum conductors, see **WARNING** in Section 5, Electrical Requirements.

When connecting to a four-conductor branch circuit, if local codes permit:

A. Free the neutral (white) lead from being restrained to any other wires. If necessary, cut the neutral (white) lead and then re-strip it to expose the proper length of conductor.

B. Attach the appliance grounding lead (green or bare copper) in accordance with local codes.

C. Connect the oven neutral (white) lead to the branch circuit neutral (white or gray) in accordance with local codes, using a wire nut.

D. Connect the oven red lead to the branch circuit red lead and the oven black lead to the branch circuit black lead in accordance with local codes, using wire nuts.

E. Install proper strain relief clamp.

F. Install junction box cover.

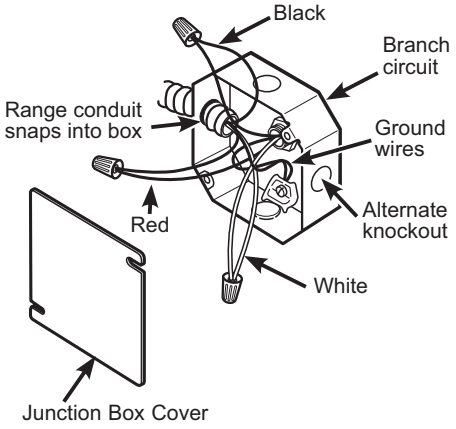

9 SLIDE OVEN INTO OPENING

A. Loop (do not tie) a 36” (91 cm) string around the conduit before the oven is slid into place. This will keep the conduit from falling behind the oven.

B. Lift oven into cabinet cutout using the oven opening as a grip. Carefully push against oven front frame. Do not push against outside edges.

C. As you slide the oven back, pull the string so that the conduit will lie on top of the oven in a natural loop. For a combination oven, pull the conduit so that it sits above the lower oven on the left side (as viewed from the front).

D. When you are sure the conduit is out of the way, slide the oven ¾ way back into the opening. Remove the string by pulling on one end of the loop.

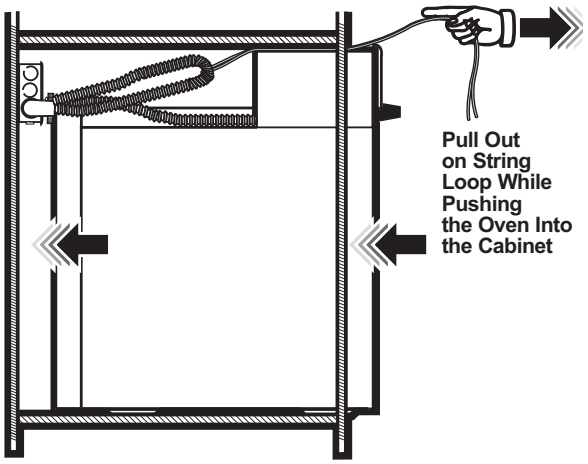

10 INSTALLING MOUNTING SCREWS (THERMAL OVEN)

⚠WARNING Mounting screws must be used. Failure to do so could result in the oven falling out of the cabinet, causing serious injury.

NOTE: During oven mounting step, ensure that no damage is done to oven gasket which lines the edge of oven cavity.

NOTE: Before drilling the pilot holes, make sure the oven is pushed as far back into the opening as it will go and is centered.

NOTE: If the cabinet is particle board, you must use #8 x ¾” particle board screws. These may be purchased at any hardware store.

A. Drill through the mounting holes (top and bottom) of the side trim for the #8 mounting screws provided.

B. Secure the oven cabinet with the screws provided.

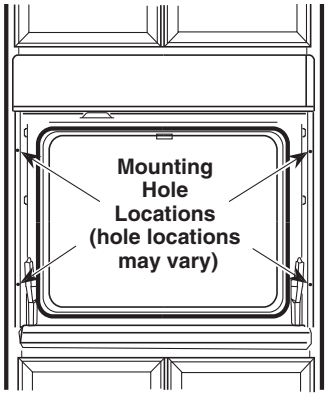

The Screws Must be a Minimum of 1/4” (6 mm) From the Front of the Cutout.

10A INSTALLING MOUNTING SCREWS (UPPER OVEN ON COMBINATION OVEN)

- Slide the oven the remaining way into the opening so that the side flanges and control panel are against the cabinet frame. Make sure that the oven is centered in the opening.
- Open the door, place a turntable tray in the oven and make sure that the tray in the unit is level.
- Drill pilot holes through the side flanges.
- Drive the color-matched screws into the side flanges. It is recommended that the screws be hand tightened.

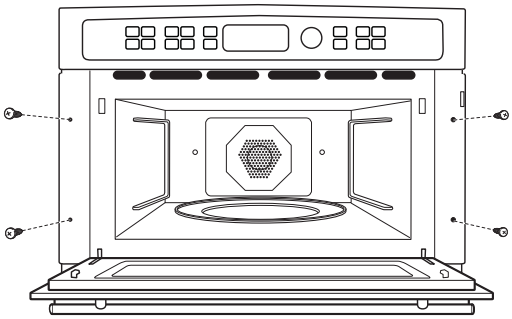

11 OVEN RACK GUIDE INSTALLATION (IF APPLICABLE)

A. Locate included oven rack guide mounting hardware.

B. Align guide to front 2 wall studs (shown as 1 and 2).

C. Once aligned and partially inserted, rotate the back of the guide toward the oven wall to install guide to back wall studs (shown as 3 and 4).

D. Start provided mounting nuts on the four wall studs.

E. Tighten the nuts in a diagonal pattern as shown (1-4-2-3).

F. Repeat steps B – E for the guide on the opposite oven wall.

NOTE: Ensure all nuts are tightened so that the guides are pressed firmly against the oven walls.

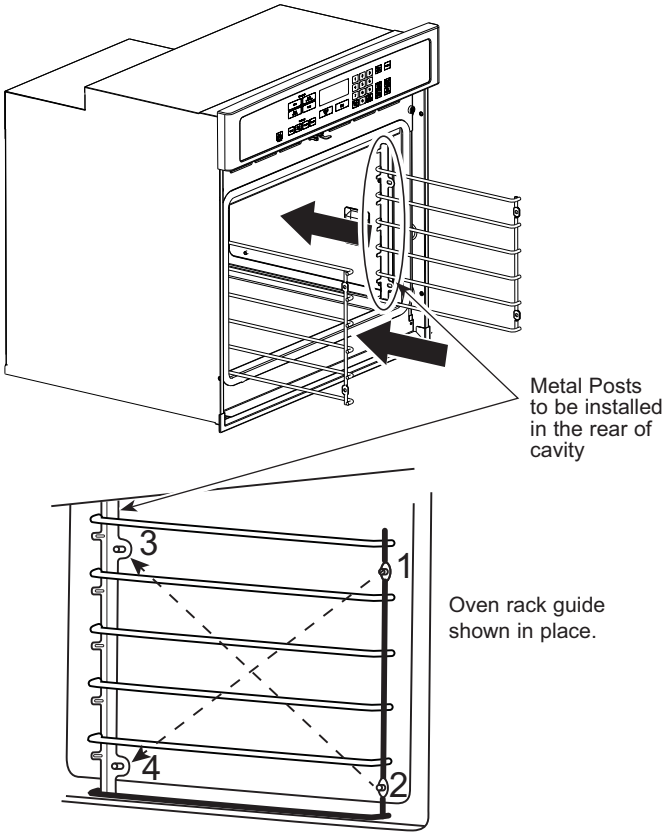

12 BOTTOM TRIM INSTALLATION

With oven installed, attach the bottom trim through its mounting holes in front vertical brace using two trim screws provided. Bottom trim lip must be placed under flange of bottom air duct.

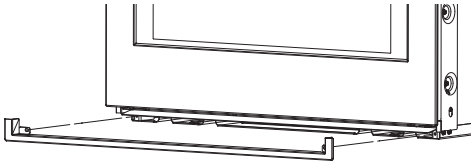

Single, Combination, and Double Wall Oven Installations without a Pedestal

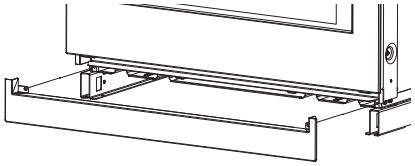

30” Double Wall Oven Installation with a Pedestal

IMPORTANT: If this unit is ever removed from the cabinet or the oven is ever pulled out for service, the bottom trim must be removed first or damage to the trim will occur.

12 A BOTTOM TRIM INSTALLATION (FRENCH DOOR ONLY)

Single Oven

- Slide oven out by 2” and attach the bottom trim through its mounting holes in front vertical brace using two trim screws provided. Bottom trim lip must be placed under flange of bottom air duct.

Exercise caution while sliding the unit back in after bottom trim installation. Installer needs to ensure that the trim does not catch the edge of the cabinet and bend. Furthermore, the installer needs to ensure that the cabinet itself is not damaged while the unit is slid back into position.

⚠WARNING Do not slide oven out more than noted dimension, the unit can tip over and fall causing serious injury & damage.

SWO’s installation

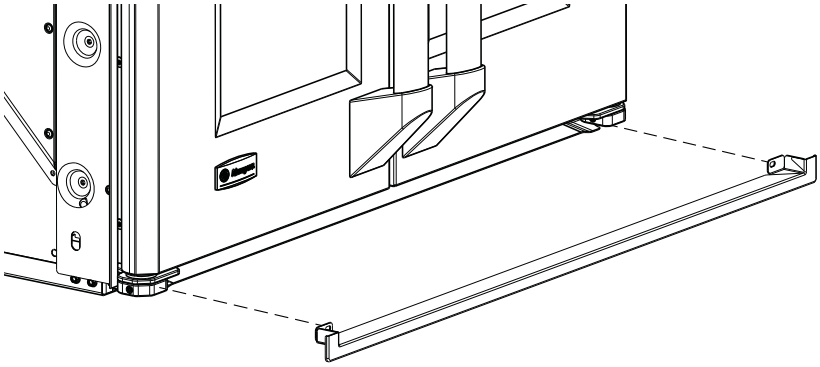

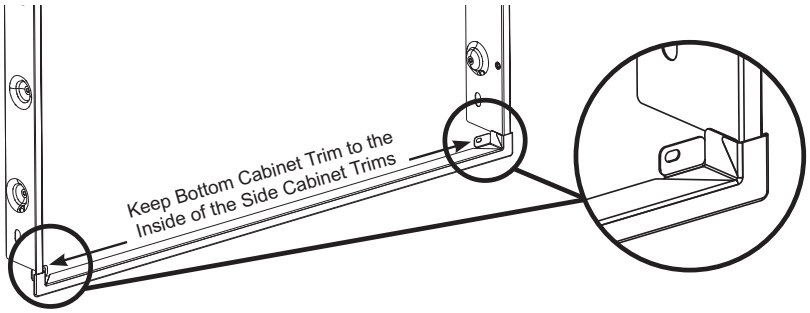

Double Oven

- With oven installed, attach the bottom trim through its mounting holes in front vertical brace using two trim screws provided. Bottom trim lip must be placed under flange of bottom air duct.

Installations without a Pedestal

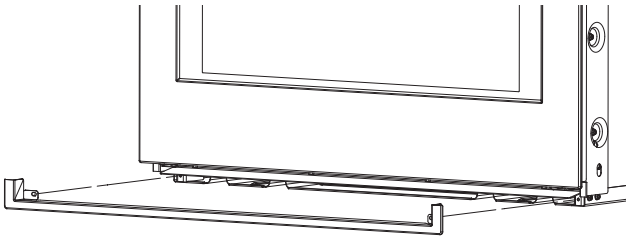

Installations with a Pedestal

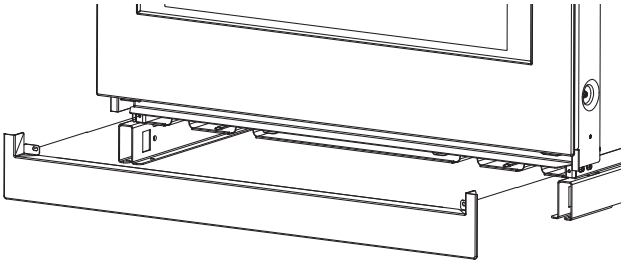

IMPORTANT: If this unit is ever removed from the cabinet or the oven is ever pulled out for service, the bottom trim must be removed first or damage to the trim will occur.

12 B BOTTOM TRIM INSTALLATION - NON-PEDESTAL, SWO AND DWO (SIDE SWING ONLY)

With oven installed, attach the support bracket to its mounting holes in front vertical brace using two trim screws provided. Support bracket lip must be placed under flange of bottom air duct.

IMPORTANT: If this unit is ever removed from the cabinet or the oven is ever pulled out for service, the bottom trim must be removed first or damage to the trim will occur.

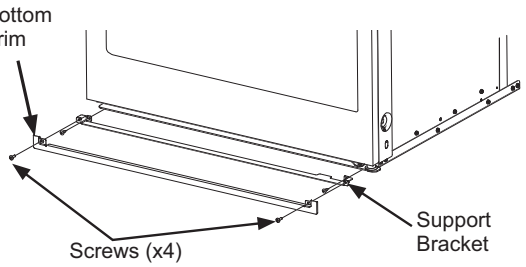

Single and Double Wall Oven Installations without a Pedestal

Assembling Support Bracket to Unit After Oven is Installed in Cabinet.

1. Align support bracket hole to the hole on vertical brace.
2. Make sure the tab on the support bracket is tucked under the bottom air duct.
3. Assemble the support bracket to the vertical brace left and right side with the two screws.

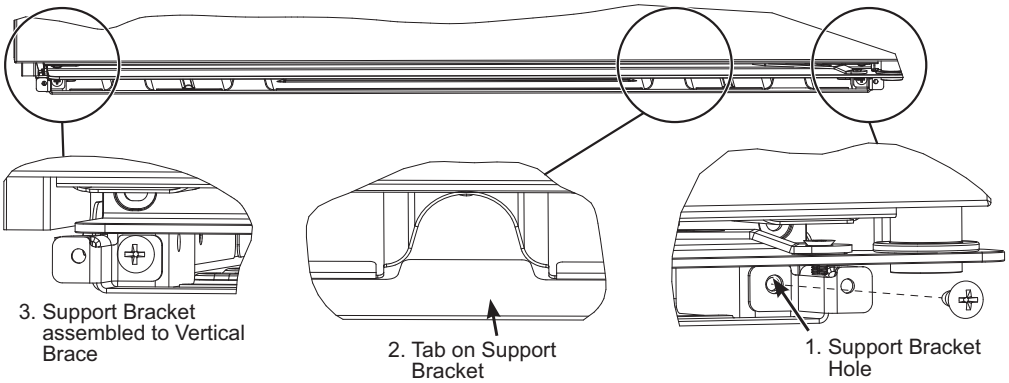

Assembling Bottom Trim to the Support Bracket

4. Make sure the bottom trim is setting on top of the support bracket across the entire width of the part and is not tucked underneath
5. Assemble the bottom trim to the support bracket left and right side with two screws on left and right.

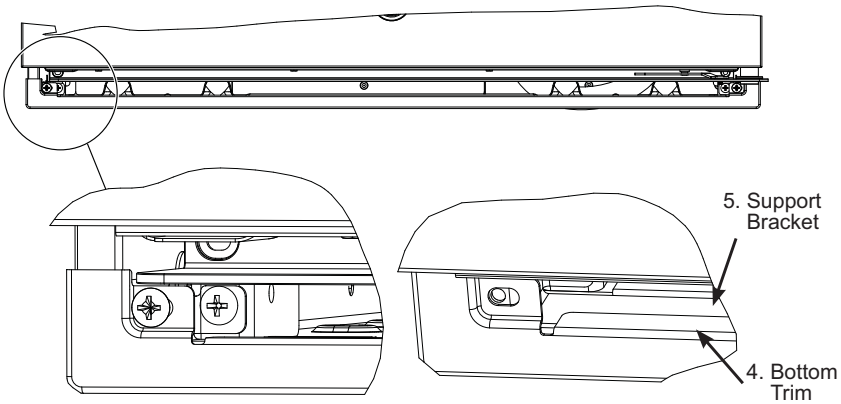

13 DOOR ADJUSTMENT MECHANISM (FRENCH DOOR ONLY)

Door Adjustment Mechanism is located on both the right and left doors at the bottom hinges. Only the left side Adjustment Mechanism is shown in this manual.

NOTE: Adjust the doors inward only until the center gap is even. Over-adjusting can damage the center seals and make the doors more difficult to open.

A. Using 3/16” hex key, tighten Vertical Adjustment Screw to adjust door up and loosen to adjust door down.

B. Horizontal Adjustment Screws pivot the door about an axis. Using a 1/8” Hex Key, loosen both screws, then tighten appropriate screw to pivot door. Once door is in place, verify both screws are tightened.

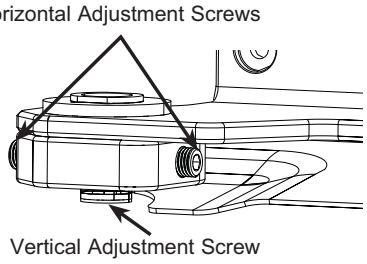

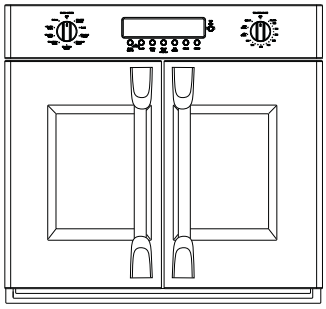

EXAGGERATED EXAMPLES FOR LEFT DOOR ADJUSTMENT

Example 1: Left door low, center gap even.

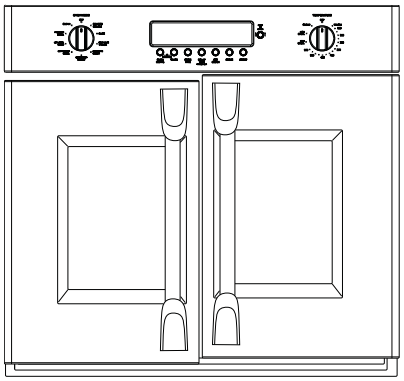

Steps for adjustment:

A. Tighten left Vertical Adjustment Screw.

B. If left door is still low, loosen right Vertical Adjustment Screw.

Example 2: Left door low, center gap larger at bottom.

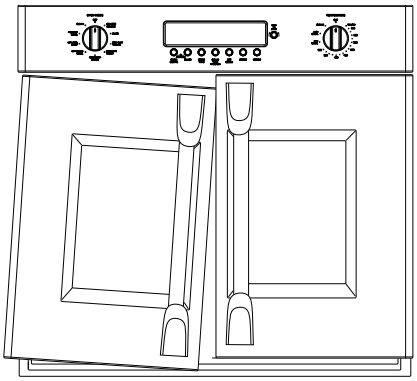

Steps for adjustment:

A. Loosen inside Horizontal Adjustment Screw.

B. Tighten outside Horizontal Adjustment Screw until center gap even.

C. If left door is still low, tighten left Vertical Adjustment Screw.

D. Tighten inside Horizontal Adjustment Screw.

Example 3: Left door high, center gap larger at top.

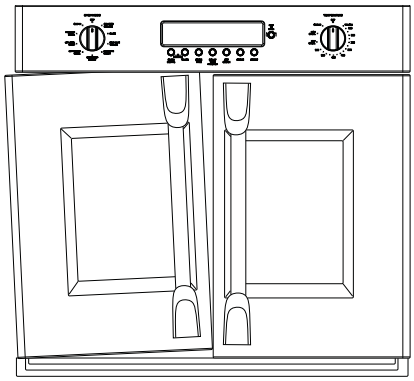

Steps for adjustment:

A. Loosen outside Horizontal Adjustment Screw.

B. Tighten Outside Horizontal Adjustment Screw until center gap even.

C. If left door is still low, tighten Left Vertical Adjustment Screw.

D. Tighten inside Horizontal Adjustment Screw.

14 PUSH-TO-OPEN DOOR UNIT LEVELING INSTRUCTIONS

INSTALLATION CHECKLIST FOR PROPER PUSH TO OPEN DOOR OPERATION:

1. Before installing unit, check cabinet base with spirit level ensuring the cabinet is level. Floor of cabinet cannot have more than 1/4 of an inch drop from front to back.
2. Install unit into cabinet and check that door falls open properly:
   - Push on the door at the center of door about 1” down from the top of the door. Push in until you here an audible “click” from the door latch.
   - Remove hand from door and let the door fall freely. Door should open on its own and come to a controlled stop at full open.
3. If the unit is not level, the door may stick before reaching fully the open position, most notably getting stuck open approximately 1” from closed position. If this occurs, follow the steps in next section to verify.

Checking if the Unit is Level after Installation:

1. Place spirit level vertically against either vertical brace (DO NOT measure using the door) as demonstrated in illustration.

NOTE: The vertical brace is the component on which the door hinges engage with the oven.

2. Check that the unit is level based on one of the following conditions:
   - If using a bubble level: the bubble should be centered between the indicator lines, ensuring that the bubble is not touching or extended past either line.
   - If using a digital level: the level should measure ±1 degree from vertical.
3. If unit does not meet one of the conditions indicated in #2, add shims to front or rear of unit or adjust the cabinet base if possible, to adjust the unit. If major adjustments are required, please contact cabinet maker or carpenter.

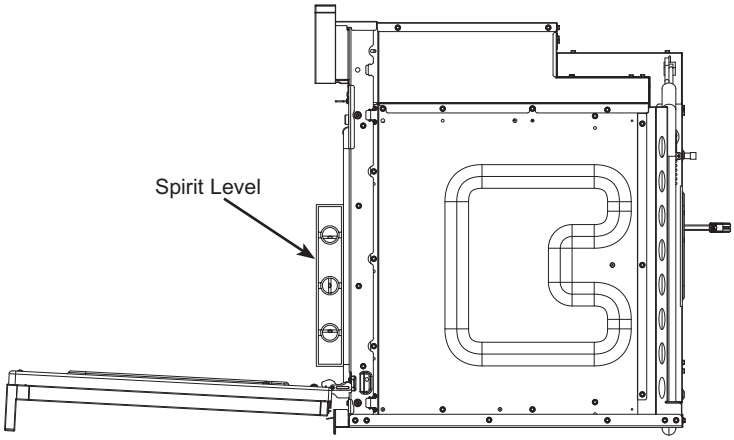

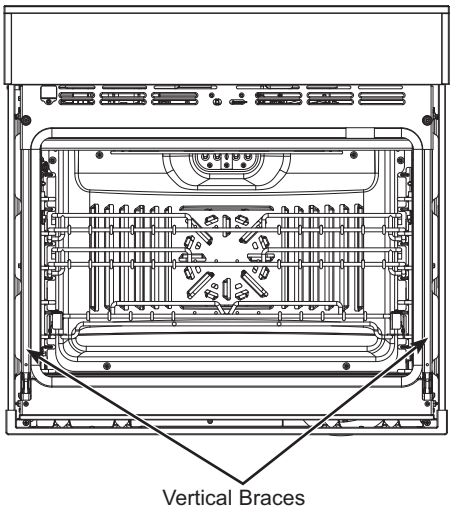

15 DOOR HANDLE INSTALLATION (on some models)

PARTS INCLUDED:

- 1 Door Handle
- 1/8” Allen wrench (for installing handle)

NOTE: The handle style shown may have a different appearance than your handle; however, installation is the same. Be careful of finished areas around the handle as they can scratch.

NOTE: If a fastener on the door is loose, tighten it with a 3/16” Allen wrench (not provided).

REMOVAL STEPS:

1. Locate the set screws on the handle caps (these may be on the less visible side).
2. Loosen the set screw on one end with the 1/8” Allen wrench. Do not remove the screw from the handle cap.
3. Support the handle while loosening the set screw on the other handle cap. Lift handle from fasteners on the door and set aside.

INSTALLATION STEPS:

IMPORTANT: If applicable, remove any plastic film from door before attaching handle.

NOTE: It is recommended to position the set screws on the side which is less visible.

1. Place handle over fasteners on door and hold in position. Make sure both the handle caps are resting on the face of the door. Support the handle while locking one end of the handle into position by tightening the set screw in the handle cap with the 1/8” Allen wrench. Do not over tighten.
2. Lock the other end of the handle into position by tightening the set screw in the handle cap with the 1/8” Allen wrench. Do not over tighten.

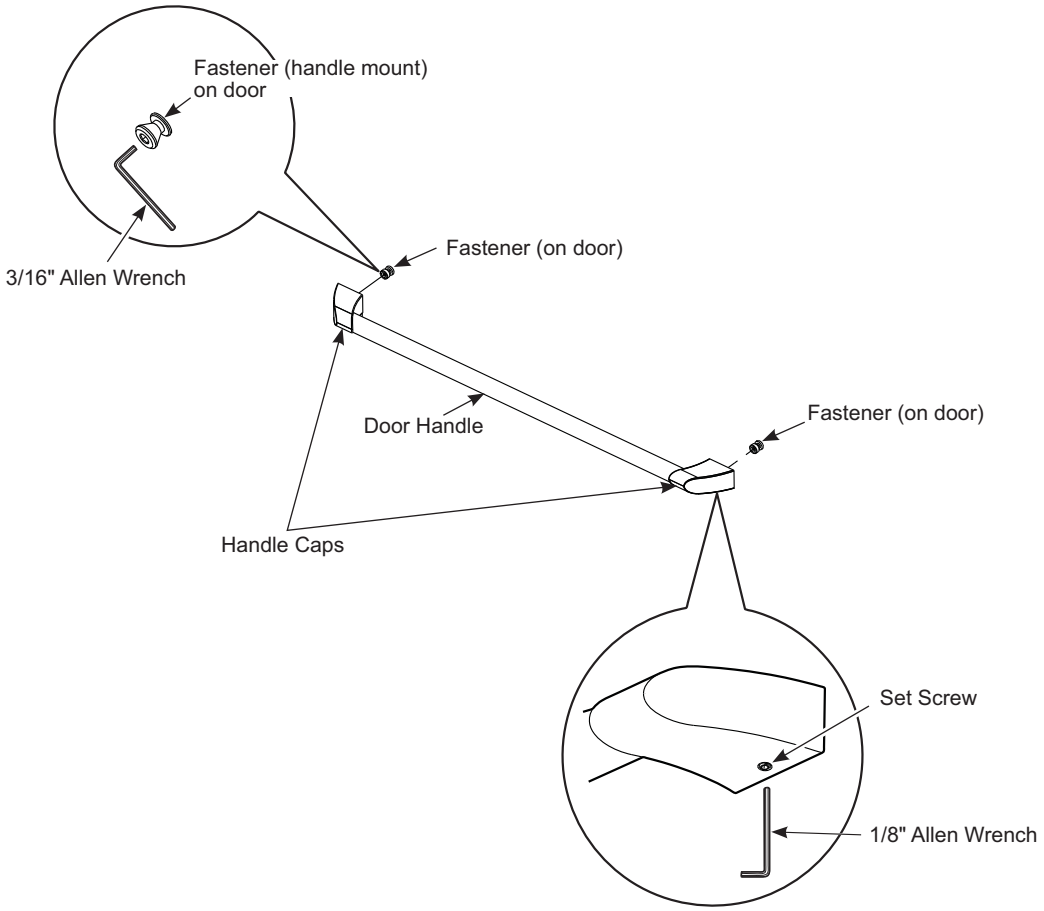

16 FINAL INSTALLATION CHECKLIST

- ☐ Check to make sure the circuit breaker is closed (RESET) or the circuit fuses are replaced.
- ☐ Be sure power is in service to the building.
- ☐ Check that all packing material and tape have been removed. Failure to remove these materials could result in damage to the appliance once the appliance has been turned on and surfaces have heated.
- ☐ Remove all items from inside the oven.
- ☐ Check to be sure that the mounting screws are installed and flush with the side trim (see Section 10).
- ☐ Check that the bottom trim is installed properly (see Section 12).
- ☐ Ensure that air duct opening at bottom of unit is free of obstructions.
- ☐ Check that oven rack guides (if applicable) are installed correctly and oven racks function smoothly.
- ☐ If applicable - install handles following handle installation instructions and check that both ends are secured.

OPERATION CHECKLIST

- ☐ Turn on the power to the oven (refer to your Owner's Manual). Verify that the bake and broil units and all cooking functions operate properly.
- ☐ See your Owner's Manual for the troubleshooting list.
- ☐ Be sure all of the oven controls are OFF before leaving the oven.

Notes