DWHD640EFP
EMERALD® 6-PROGRAM DISHWASHER
PROFESSIONAL COLLECTION HANDLE

Thermador

Home Connect

Also Available:

DWHD640EFM – Flat Stainless Steel Panel with Masterpiece® Collection Handle

DWHD640EPR – Custom Panel

FEATURES & BENEFITS

- Chef's Tool Drawer® (3rd Rack) is designed to make loading and unloading tools and hard to place items extraordinarily easier
- Three stage advanced filtration recirculates water for sparkling results
- 3-Level adjustable upper rack is customizable for all of your needs, designed to be raised for extra large items placed on the bottom rack, or lowered to fit taller wine glasses on the upper rack
- Extra Dry Option adds extra heat to the final rinse to enhance drying results
- Impressively Quiet — 48 dBA for peaceful kitchen experience
- Use the exclusive Home Connect® app to refine your cleanup routine with remote control and receive timely notifications that keep track of every dish tab so you never run out

GENERAL PROPERTIES	
Number of Wash Cycles	6+2 Additional in Home Connect®
Number of Options	4+1 Additional in Home Connect®
Additional Wash Cycles and Options available in Home Connect®	Cycles: Machine Care, Rinse Options: Save Time
NSF®-Certified* Sanitize Option	Yes
dBA	48
Third Rack	Chef's Tool Drawer®
Rack Adjustability	Rackmatic 3-Stage
Tub Material	Stainless Steel
Control Type	Touch Control
Concealed Water Heating Element	Yes
Leak Protection System	24/7 AquaStop®
Water Softener	No
Five-Level Wash	Yes
Childlock	No
Home Connect® (Wi-Fi Enabled)	Yes
EFFICIENCY	
Water Usage Per Cycle	3.2 g
Energy Efficiency Class	Tier 1
ENERGY STAR® Certified	Yes
Total Annual Energy Consumption	240 kWh
Total Annual Water Consumption	623.5 g
CAPACITY	
Number of Place Settings	16
TECHNICAL DETAILS	
Watts	1,440 W
Current	12 A
Volts	120 V
Frequency	60 Hz
Power Cord Length	67"
Power Cord Install Length from Corner of Unit when Facing the Door	Left - 45" Right - 56"
Minimum Water Pressure	14 (lb/sin)
Max. Temperature for Water Intake	140° F
Length Inlet Hose	N/A
Length Outlet Hose	90.5"
DIMENSIONS & WEIGHT	
Overall Appliance Dimensions (HxWxD)	33 7/8" x 23 9/16" x 23 3/4"
Required Cutout Size (HxWxD)	33 7/8" Min. x 24" Min. x 24"
Adjustable Feet	Yes
Net Weight	85.1 lbs

*Certification to NSF/ANSI Standard 184 for residential dishwashers

DWHD640EFP
EMERALD® 6-PROGRAM DISHWASHER
PROFESSIONAL COLLECTION HANDLE

WARRANTY	
Limited Warranty, Entire Appliance, Parts and Labor	2 Year
Limited Warranty for Microprocessor or Printed Circuit Board; Parts Only	3rd to 5th Year
Limited Warranty for Racks (Does Not Include Rack Components); Parts Only	3rd to 5th Year
Limited Warranty for Rust-through On Inner Tub Liner; Parts Only	Lifetime

ACCESSORIES (OPTIONAL)	
Dishwasher Installation Kit (Junction Box, 90° Elbow and Water Supply Hose)	SMZ3IN1UC
Dishwasher Supply and Drainage Hose Extension 76 3/4"	SGZ1010UC
Junction Box	SMZPCJB1UC
Cabinet Protector with Power Cord Clip	SMZEPCC1UC
Water Supply Hose	SMZSH1ABUC
Dishwasher Accessory Kit**	SMZ5000
Duo Silverware Basket	SMZ4000UC
Fine Silverware Carafe	SMZ5002UC

**Accessory Kit includes Extra-Tall-Item Sprinkler, Vase / Bottle Holder, 3 Plastic Item Clips and Small Item Basket

Duo Silverware Basket

Fine Silverware Carafe

DISHWASHER & CUTOUT DIMENSIONS

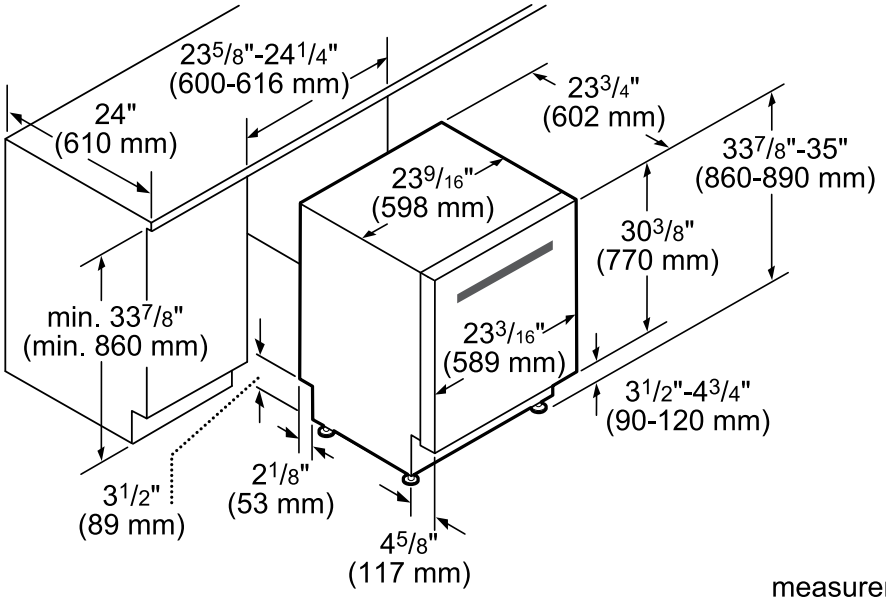

measurements in inches and mm

These warranties give you specific legal rights and you may have other rights that vary from state to state. Limited warranty from date of delivery. For complete warranty details, refer to your Use & Care manual, or ask your dealer.

Specifications are for planning purposes only. Refer to installation instructions and consult your countertop supplier prior to making counter opening. Consult with a heating and ventilation engineer for your specific ventilation requirements. For the most detailed information, refer to installation instructions accompanying product or write to Thermador indicating the model number. Specifications are correct at time of printing. Thermador reserves the right to change product specifications or design without notice. Some models are certified for use in Canada. Thermador is not responsible for products that are transported from the U.S. for use in Canada.

1 800 735 4328 | USA THERMADOR.COM | CANADA THERMADOR.CA | ©2025 BSH HOME APPLIANCES CORPORATION. ALL RIGHTS RESERVED.